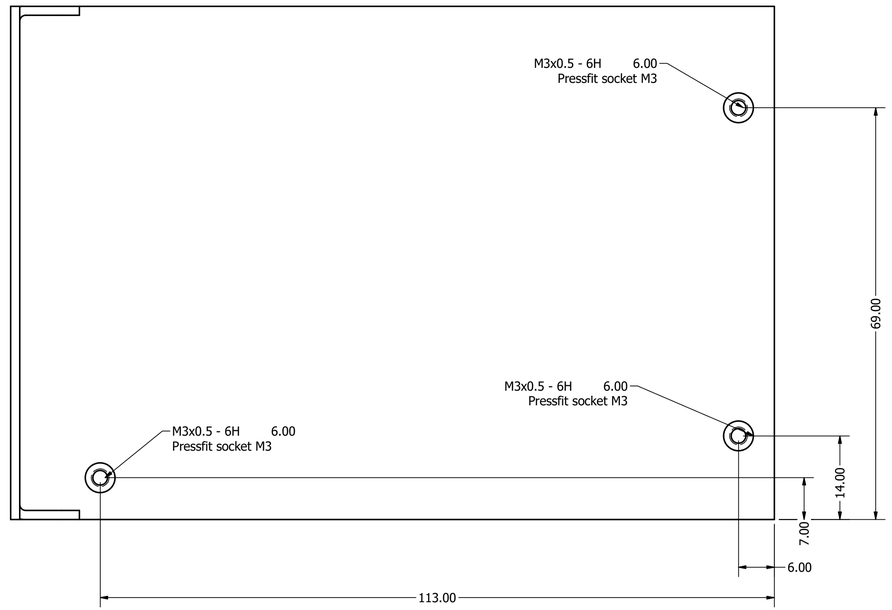

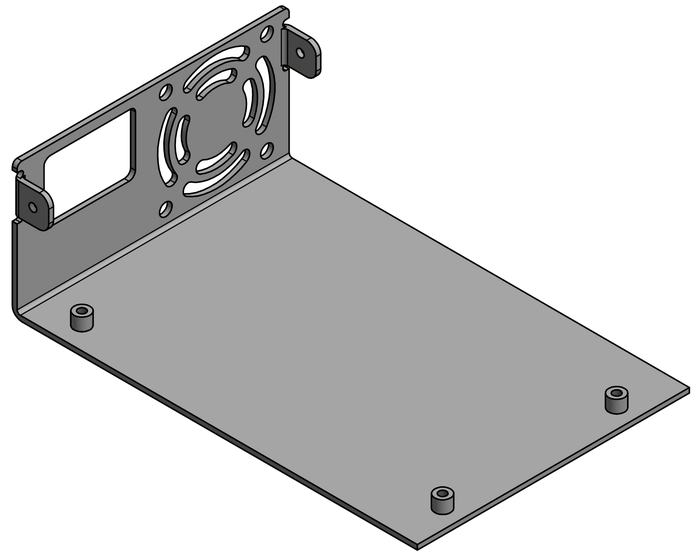

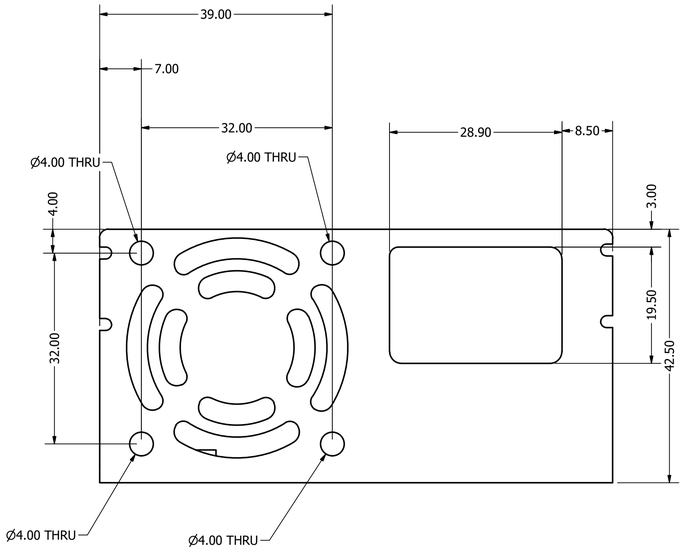



PARTS LIST			
ITEM	QTY	PART NUMBER	DESCRIPTION
1	1	FR100002271 Metal Baseplate I	galvanized steel

DRAWN	zechnerf	04.10.2019
CHECKED		
QA		
MFG		
APPROVED		

TITLE

SIZE D | DWG NO FR100002271 Metal Baseplate I | REV

SCALE 2:1 | SHEET 1 OF 1